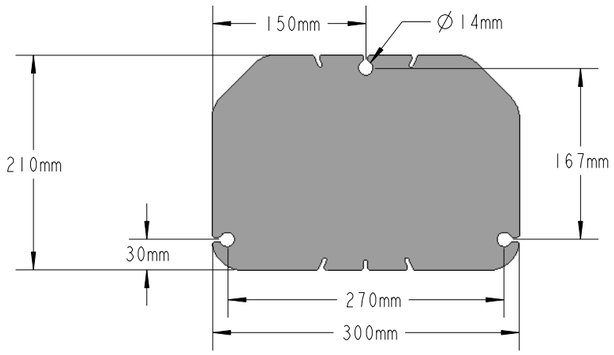

BASE PLATE,
SCALE 29:160

SPECIFICATIONS:
ELECTRICAL REQUIREMENTS; 120V 60Hz 10A (220V 50Hz AVAILABLE)
PC WINDOWS OPERATING SYSTEM, 27" MONITOR
AUTOMATIC POSITIONING OF THE CAMERAS
AUTOMATIC RECOGNITION OF THE TARGETS
UNIT CONSISTS OF: (1) PC w/WINDOWS, (1) MOVABLE
CROSSBEAM w/MEASURING HEADS, (1) HARD MOUNTERD COLUMN,
(4) STDA46EU 4-POINT CLAMPS W/TIRE GRABBERS
AND TARGETS, SET OF (8) EXTENSIONS FOR DUALLY WHEELS
(1) STDA94 LOW DEPTH ABS CLAWS (BAG OF 8)
(1) BREAK PEDAL DEPRESSOR
(1) STEERING WHEEL LOCK
(1) MOBILE STORAGE CART
INSTRUCTION/INSTALLATION/PARTS BREAKDOWN ONLINE ONLY
(1) YEAR FREE VEHICLE DATA UPDATES
(1) YEAR LABOR WARRANTY, (3) YEARS PARTS WARRANTY.
SHIPPING CUBES & WEIGTHS;
(1) 42-3/4"(1086mm) x 41-1/2"(1056mm) x 64"(1625mm), 352 lbs (160Kg)
(1) 1122-5/8"(3116mm) x 15-3/16"(386mm) x 18-1/8"(460mm), 154 lbs (70Kg)
(1) 108-1/8"(2746mm) x 16-3/8"(416mm) x 18-1/8"(460mm), 220 lbs

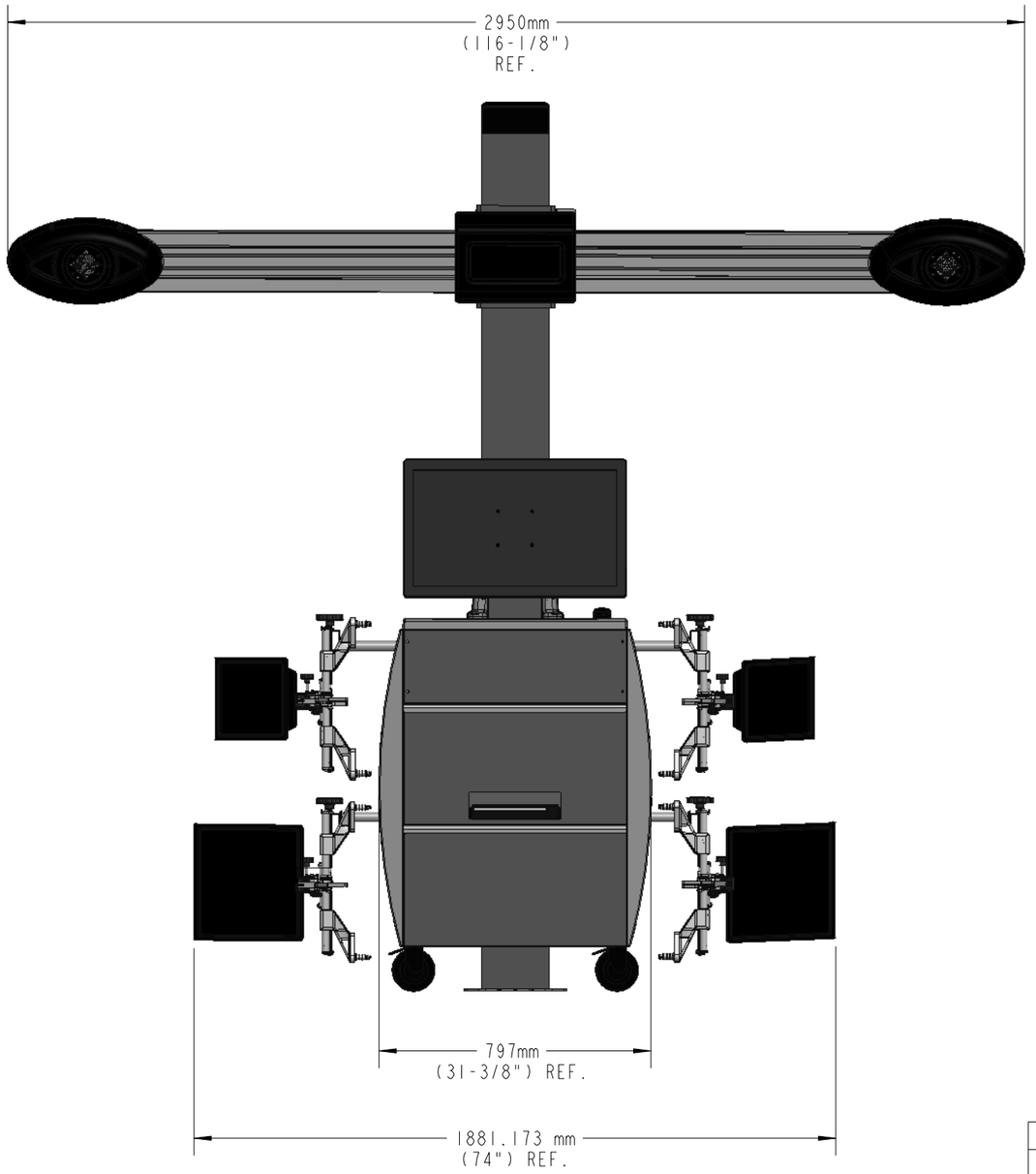

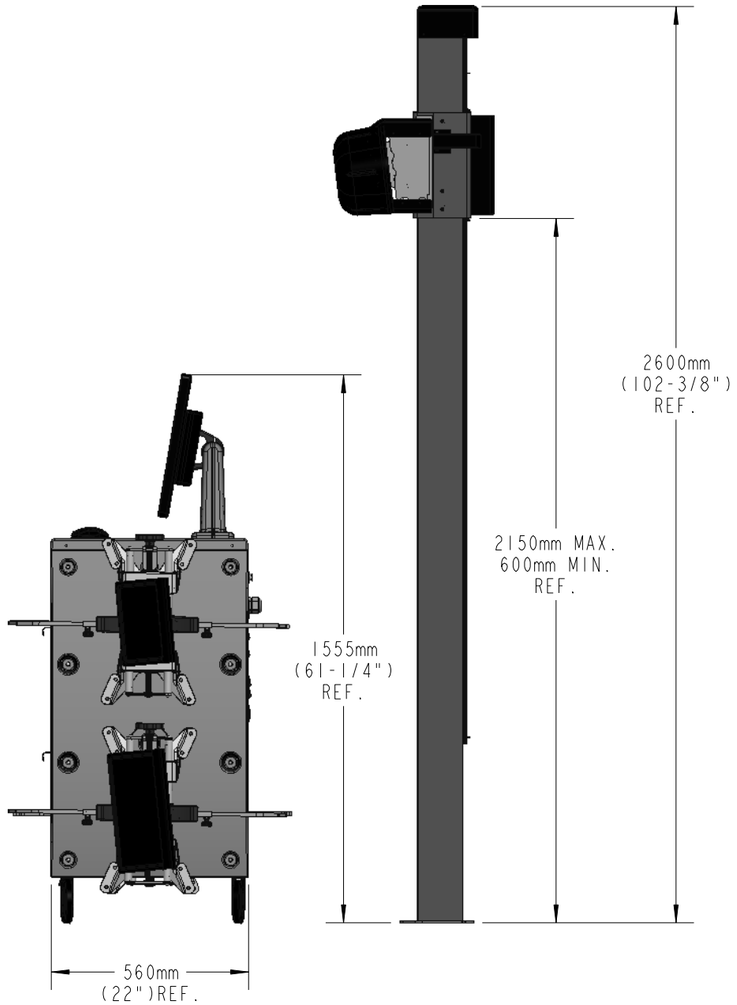

-	12430	3-27-24	GDL/BKM
REV	CO NUM	DATE	BY

TOLERANCE UNLESS OTHERWISE SPECIFIED:
FRACTIONAL DIMENSIONS: ± 1/32" (< 12")
± 1/16" (> OR = 12")
DECIMAL DIMENSIONS: ± .010"
ANGULAR DIMENSIONS: ± 1°
WELD BEAD SIZE: +1/8"/-0 WELD BEAD LENGTH: +1/2"/-0
WELD BEAD POSITION: ±1/2"

NOTES:

THIRD ANGLE PROJECTION

DO NOT SCALE DRAWING

UNLESS OTHERWISE SPECIFIED:
ALL DIMENSIONS IN INCHES
1/32" MIN. CORNER BREAK
REMOVE ALL BURRS

The design and detail illustrated in this drawing is the property of Vehicle Service Group. It is being loaned with the expressed condition that it will not be duplicated or used except by permission and is subject to return upon request.

3D CROSSBEAM
ALIGNER

DRAWN	SCALE	SHEET
GDL	1:16	1 of 1
APPROVED	DATE	DRAWING NUMBER
BKM	3-27-24	R1075-001

R1075-001 ALIGNER FROM VSGA
MATERIAL DESCRIPTION